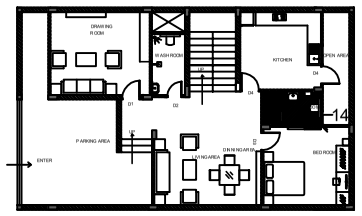

KEY PLAN

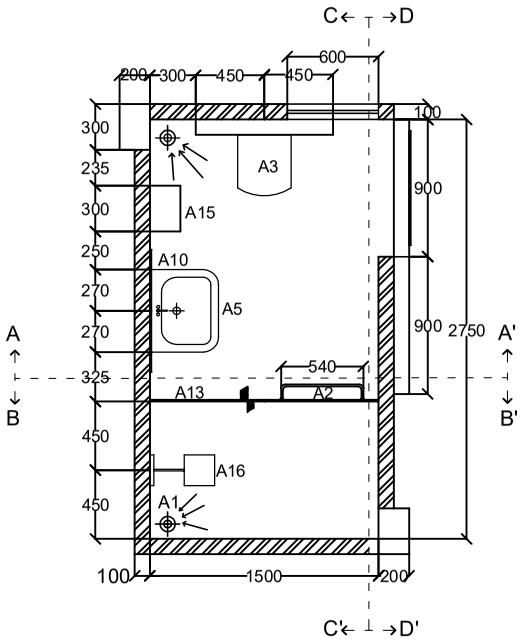

PLAN

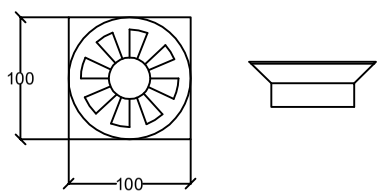

NAHANI TRAP DETAIL

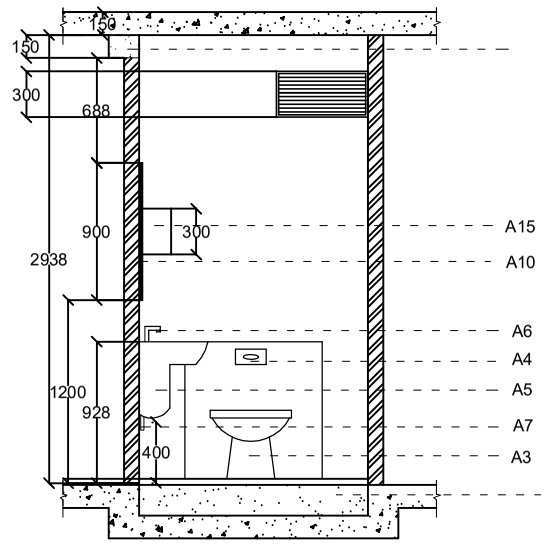

RCC SLAB AS PER THE CIVIL DETAIL

COBA FILLING AS PER THE CIVIL DETAIL

SECTIONAL ELEVATION AA'

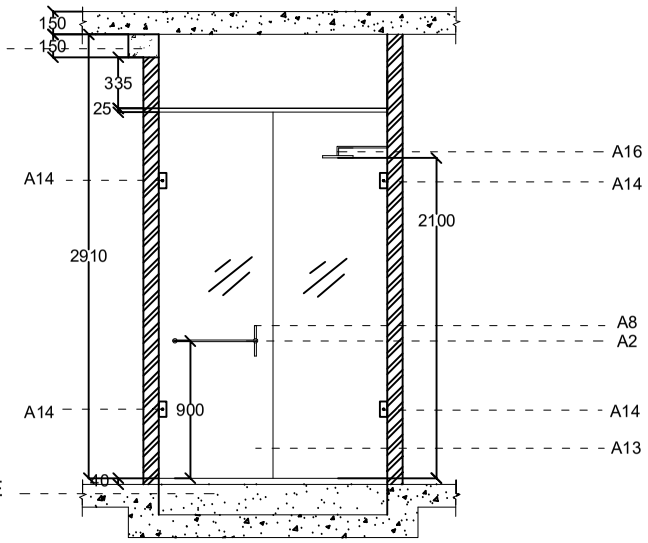

SECTIONAL ELEVATION BB'

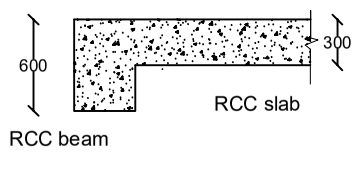

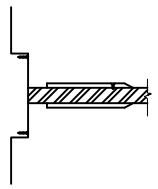

DETAIL A14

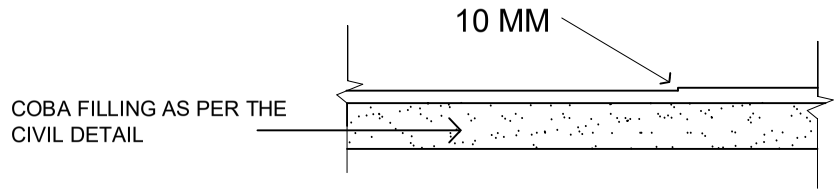

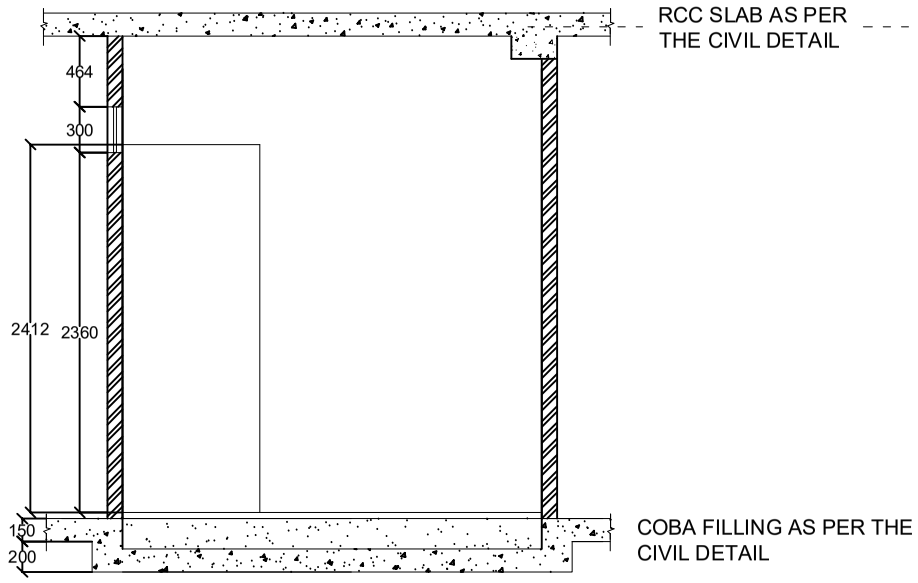

RCC SLAB AS PER THE CIVIL DETAIL

COBA FILLING AS PER THE CIVIL DETAIL

SECTIONAL ELEVATION DD'

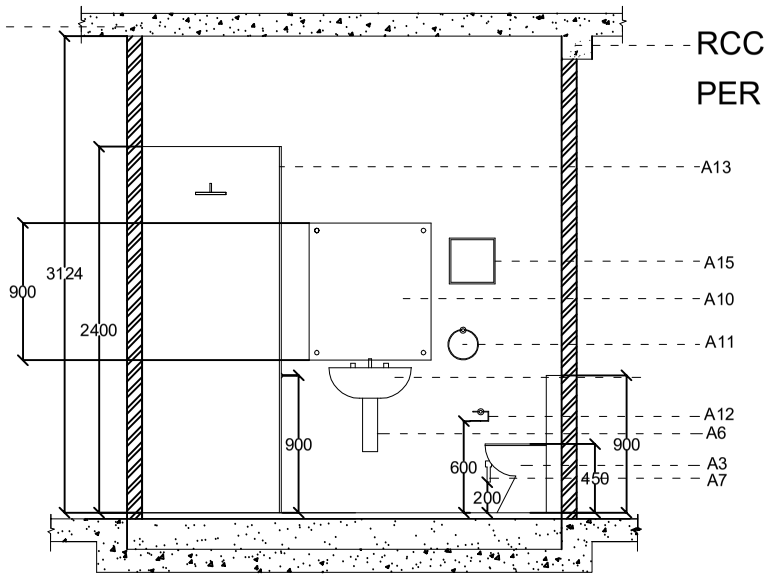

RCC BEAM AS PER DETAIL

SECTIONAL ELEVATION CC'

WORKING DRAWING

NOTES

A1- Sink drainer (small) CAT Model DR 02
Size Dia.68

A2- Towel rod
Model No. -T035CC

A3- Prado S Trap
Model No. - P5707PW
White in colour

A4- Concealed Cisterns-Integra push plate oval Chrome G3432CP

A5- wash basin -IRIS
Dim. 450x300x175 white P1415PW
Basin

A6- Center hole basin mixture T3117C

A7- Spun health faucet

A8- H90PSS 300 MM Glass door handle

A9- P-IIT marc tip-top spout

A10- Mirror attached with studs

A11- Thomas crapper chrome
towel ring 800X900

A12- Logis toilet paper holder 4052600

A13- Frosted glass 12 mm

A14- Mont hard wall to glass shower hinge
in polished chrome finish
Brand - Rocewell

A15- 10 MM toughened glass shelves

A16- Shower panel (black)
code -JPL-BLK-JA011
s.s structure 3 adjustable vertical jets (square) shower head 200 mm (square
thermostatic mixer with dive- flexible house

Brand - jaquar

TOPIC-BATHROOM

SIGNATURE	REMARK
DATE	SCALE
25-09-18	1:50

NAME - SUNANDA PATIL

SEM - V YEAR - III
B.DESIGN IN ID
SDPS WOMEN'S COLLEGE